CX Mission Critical Facilities for Safety and Resiliency Select Agent BSL-3 Lab

Dave Guberud QCxP, CxA

Rachel Rueckert P.E., QCxP, CxA, LEED AP

AIA Quality Assurance

The Building Commissioning Association is a Registered Provider with The American Institute of Architects Continuing Education Systems (AIA/CES). Credit(s) earned on completion of this program will be reported to AIA/CES for AIA members. Certificates of the Completion for both AIA members and non-AIA members are available upon request.

This program is registered with AIA/CES for continuing professional education. As such, it does not include content that may be deemed or construed to be an approval or endorsement by the AIA of any material of construction or any method or manner of handling, using, distributing, or dealing in any material or product.

Questions related to specific materials, methods, and services will be addressed at the conclusion of this presentation.

Learning Objectives

1. Identify the threats and vulnerabilities of facilities to biological, weather-related, and other disaster events.
2. Recognize the principles of resiliency and how they compare with sustainability.
3. Design a space with the proper air balance to prohibit potential health, safety, and welfare disasters.
4. Identify what the Commissioning Provider does to support the Responsible Official.

Something so cute, small and/or unassuming can be so dangerous

ricin

ebola

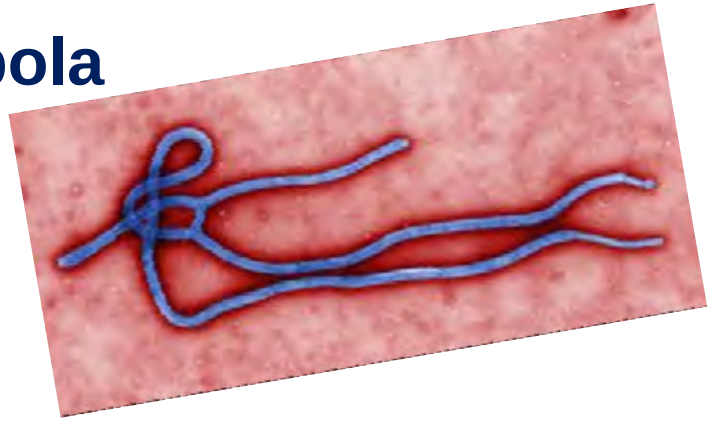

bird flu

monkey pox

BSL Labs & associated terms

BSL: Biological-Safety Level

BSL's types are identified by both numbers and suffixes or prefixes:

- The higher the number between 1 and 4, the more stringent the standards are with which to comply
- ABSL - "A" indicates animal
- AgBSL – "Ag" indicates agriculture
- BSL E – "E" indicates enhanced
- BSL SA – "SA" indicates select agent

BSC: Biological Safety Cabinet (most popular Class II type A)

RO: Responsible Officer

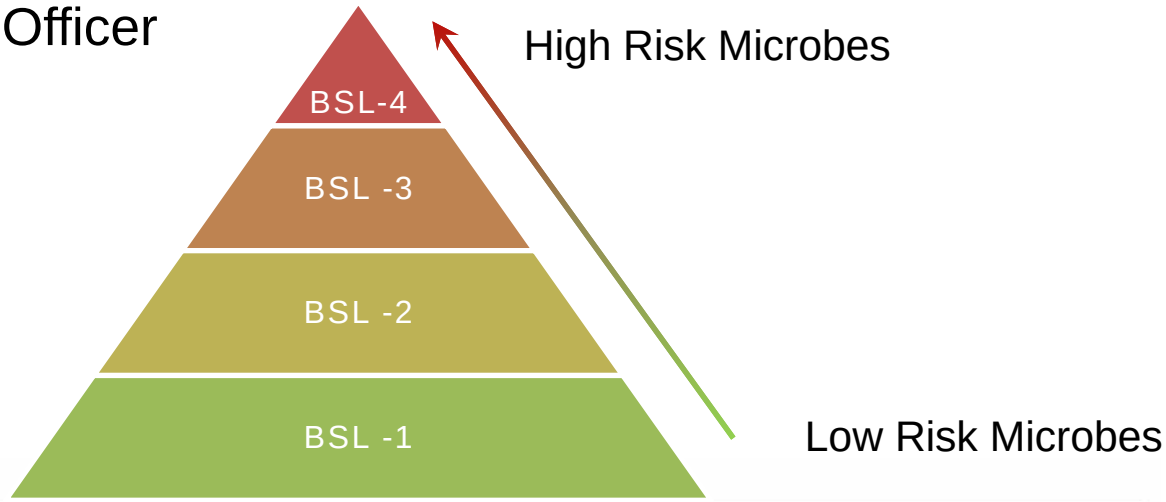

BSL1 Labs – What Defines “1”

Risks are known (low and well characterized)

No potential loss to Ag industry

No special practices (other than good micro-biological techniques)

- Cleanable
- Hand Sinks
- Waste is segregated by hazard type

No specific recommendation for isolating lab building

Labs typically within this category include the typical undergraduate / secondary education teaching labs

BSL2 Labs – What Defines “2”

Moderate potential hazard to animals

Endemic in nature (people have been exposed to these before)

Illness is treatable or preventable

BSL1 micro-biological techniques are followed, plus:

- Higher level of PPE (gloves, lab jackets, etc.)
- Using BSCs when working with splatters or aerosols
- Restricted access by signage and closed doors
- Though no requirement for directional air flow, most are designed negative to adjacent spaces

Labs typically within this category include most research and diagnostic labs that work with food-borne pathogens and domestic diseases

BSL2 Labs

Biosafety Cabinet air flow

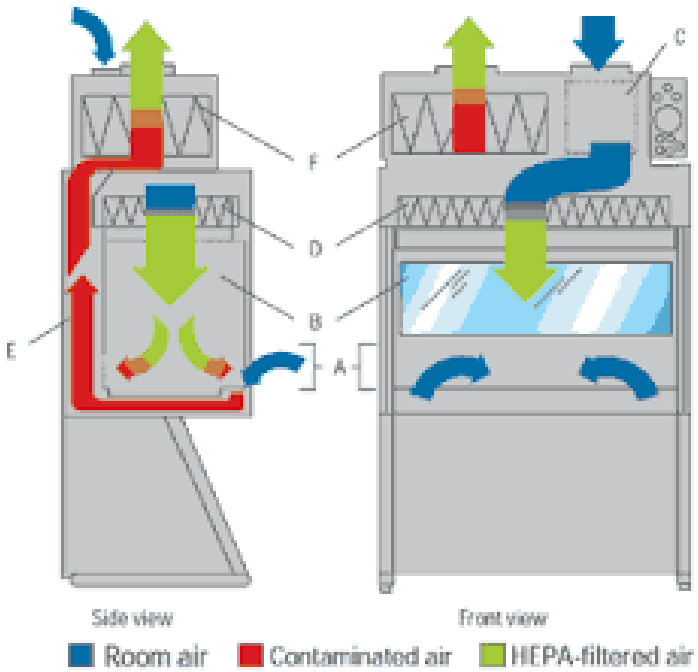

Biosafety Cabinet

BSL3 Labs – What Defines “3”

Indigenous or exotic agents that can cause lethal infections or grave consequences to agriculture

BSL1 and BSL2 micro-biological techniques are followed, plus:

- Separated from other areas (secondary barrier)
- Inward air flow (air moves from lesser contaminated areas to areas of greater contamination)
- Personnel must participate in medical surveillance program
- Double door entry & higher security measures
- Higher PPE protective clothing
- HEPA filtering
- Pressure measuring and monitoring
- Defined decontamination strategies

BSL3 Labs

BSL4 Labs – What Defines “4"

Research on dangerous and exotic agents that pose high individual risk of human life-threatening diseases which may be transmitted via aerosol route and for which there is no available vaccine or treatment

BSL1, BSL2 and BSL3 micro-biological techniques are followed, plus:

- Cabinet Laboratory: Manipulation of agents must be performed in a Class III BSC
- Suite Laboratory: Personal must wear a positive pressure supplied protective suit

BSL4 Labs

Protective Suit

Class III BSC

Who is in control and who writes the standards?

FSAP: Federal Select Agent Program

BMBL: Biosafety in Microbiological and Biomedical Laboratory standards

ANSI/ASSE Z9.14

Select Agents

HHS and USDA Select Agents and Toxins
7CFR Part 331, 9 CFR Part 121, and 42 CFR Part 73

HHS SELECT AGENTS AND TOXINS

Abrin
Botulinum neurotoxins*
Botulinum neurotoxin producing species of Clostridium*
Conotoxins
Coxiella burnetii
Crimean-Congo haemorrhagic fever virus
Diacetoxyscirpenol
Eastern Equine Encephalitis virus[3]
Ebola virus*
Francisella tularensis*
Lassa fever virus
Lujo virus
Marburg virus*
Monkeypox virus[3]
Reconstructed replication competent forms of the 1918 pandemic influenza virus containing any portion of the coding regions of all eight gene segments (Reconstructed 1918 Influenza virus)
Ricin
Rickettsia prowazekii
SARS-associated coronavirus (SARS-CoV)
Saxitoxin
South American Haemorrhagic Fever viruses:
- Chapare
- Guanarito
- Junin
- Machupo
- Sabia

Staphylococcal enterotoxins A,B,C,D,E subtypes
T-2 toxin
Tetrodotoxin
Tick-borne encephalitis complex (flavi) viruses:
Far Eastern subtype
Siberian subtype
Kyasanur Forest disease virus
Omsk hemorrhagic fever virus
Variola major virus (Smallpox virus)*
Variola minor virus (Alastrim)*
Yersinia pestis*

OVERLAP SELECT AGENTS AND TOXINS

Bacillus anthracis*
Bacillus anthracis Pasteur strain
Brucella abortus
Brucella melitensis
Brucella suis
Burkholderia mallei*
Burkholderia pseudomallei*
Hendra virus
Nipah virus
Rift Valley fever virus
Venezuelan equine encephalitis virus[3]

USDA SELECT AGENTS AND TOXINS

African horse sickness virus
African swine fever virus
Avian influenza virus[3]
Classical swine fever virus
Foot-and-mouth disease virus*
Goat pox virus
Lumpy skin disease virus
Mycoplasma capricolum[3]
Mycoplasma mycoides[3]
Newcastle disease virus[2,3]
Peste des petits ruminants virus
Rinderpest virus*
Sheep pox virus
Swine vesicular disease virus

USDA PLANT PROTECTION AND QUARANTINE (PPQ) SELECT AGENTS AND TOXINS

Peronosclerospora philippinensis (Peronosclerospora sacchari)
Phoma glycinicola (formerly Pyrenochaeta glycines)
Ralstonia solanacearum
Rathayibacter toxicus
Sclerophthora rayssiae
Synchytrium endobioticum
Xanthomonas oryzae

*Denotes Tier 1 Agent

Commissioning a BSL3 SA Lab

Two main topics where the RO needs Cx support:

- Why are we building this lab so tight (decontamination) and how do we prove it was built tight (ANSI/ASSE 8.4.8 Testing Ductwork and Room Air Leakage)?
- How do we comply with the following statement from FSAP?

  Documentation provided to FSAP of verification of HVAC design functionality under failure conditions must demonstrate that under exhaust fan or normal power failure conditions, or during normal power start-up, there is no reversal of air which originates within the BSL-3 / ABSL-3 laboratory or vivarium room that travels all of the way outside the containment boundary.

Commissioning a BSL3 SA Lab

Our reference space

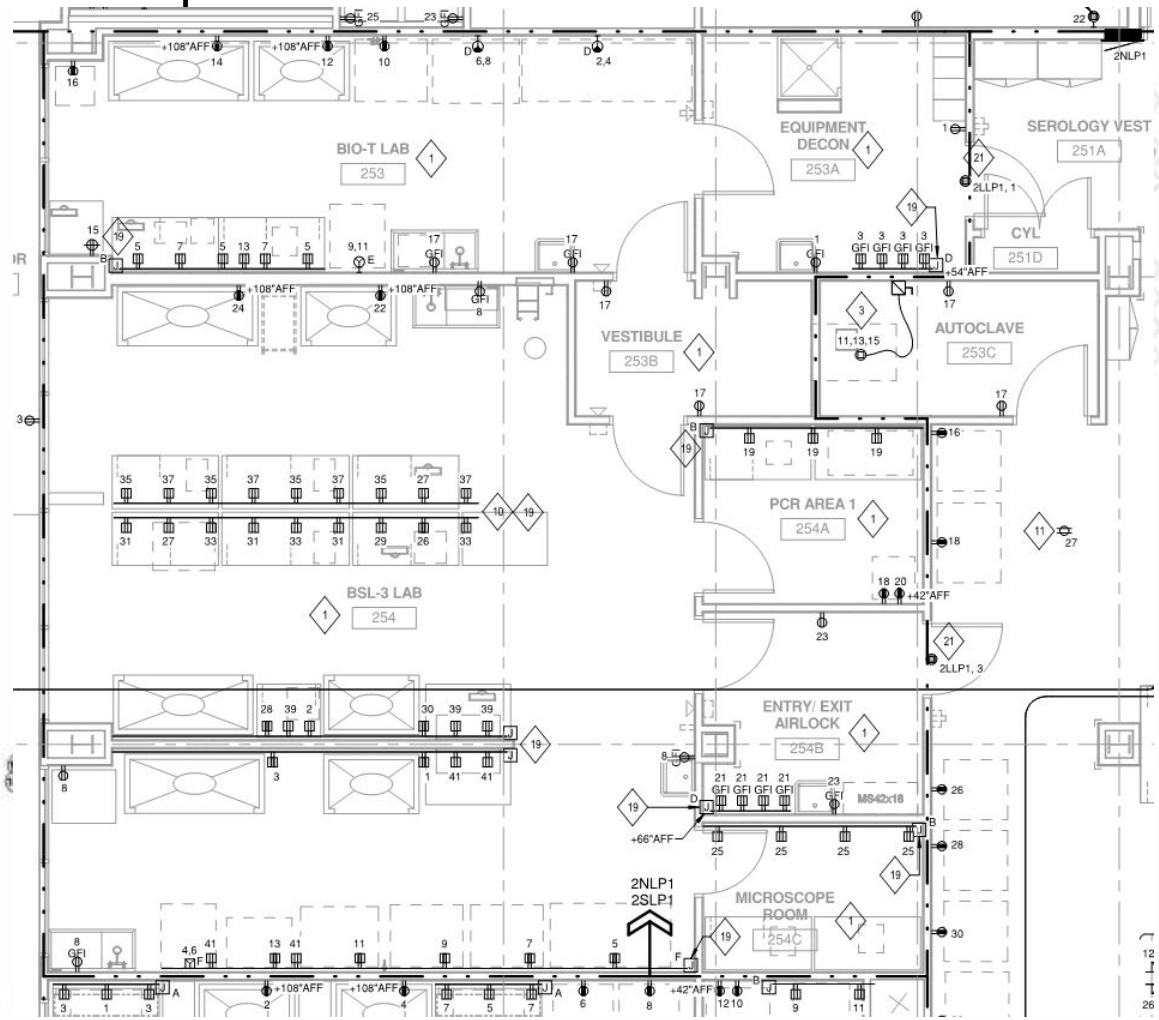

Commissioning a BSL3 SA Lab

Our reference space (the mechanical system)

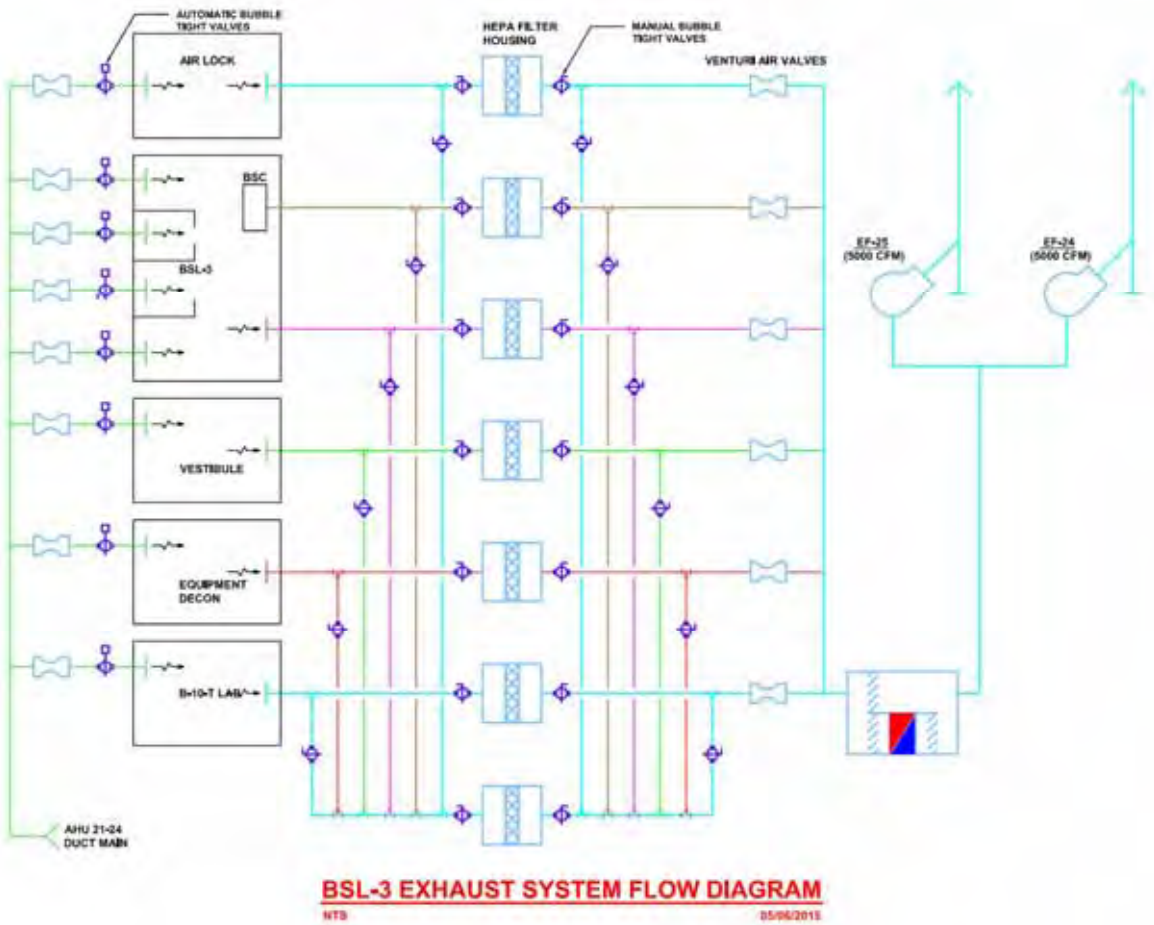

Commissioning a BSL3 SA Lab

Our reference space (the mechanical system)

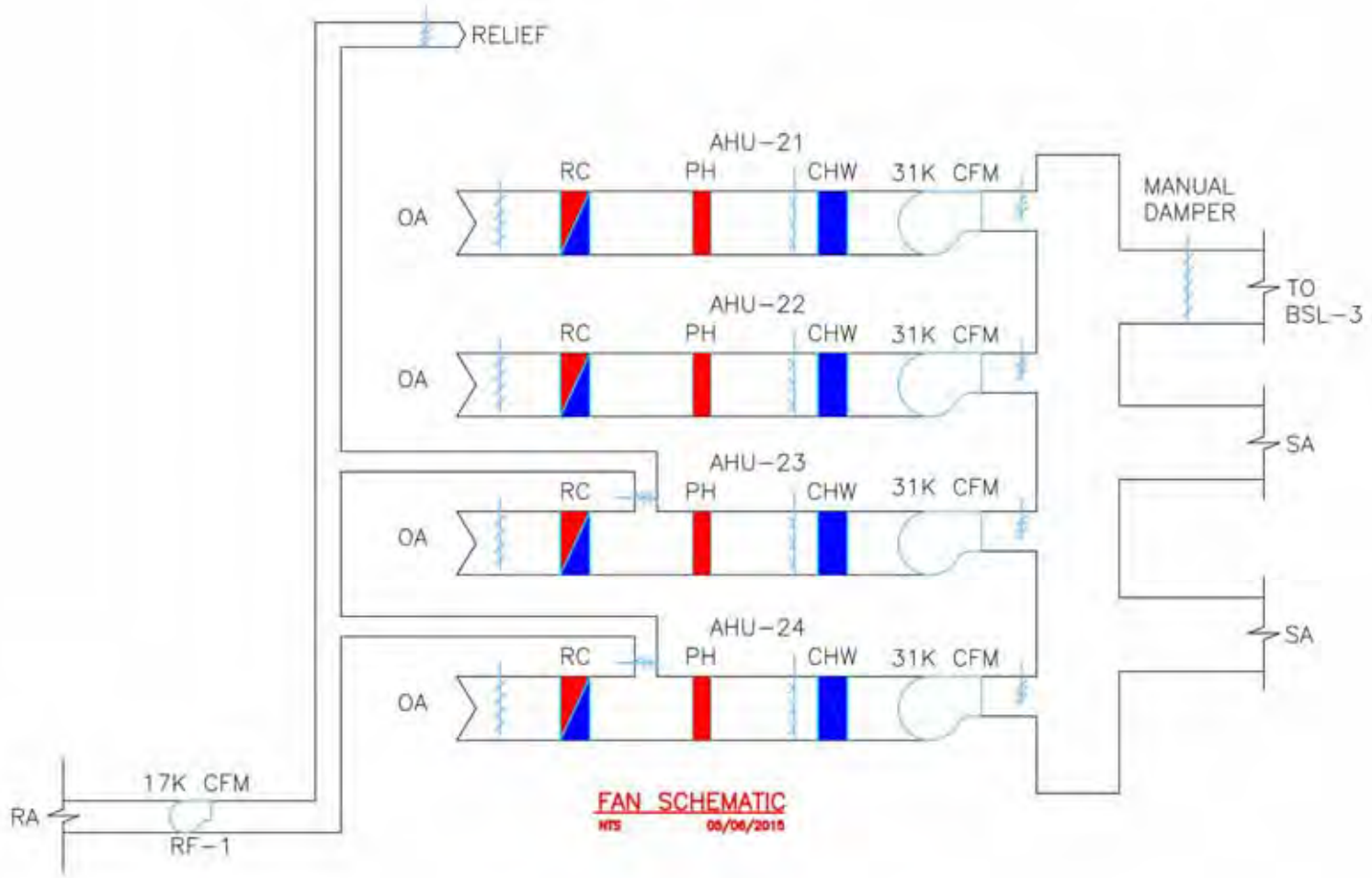

The reason we are building the lab so tight…

Obvious reason:

Prevent escape of airborne biohazards

Less obvious reason:

Decontamination

- Cleaning chemicals are virtually as dangerous as the SA
- Intent is to decontaminate a space while allowing other work to occur in adjacent areas

Either a Leak Test or a Decay Test can be used

Let's build it first…. Tight Tight Tight

What level are we building the lab to…

To create a space where decontamination by fumigation can occur requires all penetrations in the barrier envelope to be sealed (or capable of being sealed) in order to prevent excessive migration of fumigants out of the space.

This can be very challenging:

- Most constructors have never built anything this tight
- Many constructors do not fully grasp what it takes to be sufficiently “tight” at the conceptual stage of this process
- Think of building a pool for air that operates as a black hole…nothing ever gets out past the walls that define the space

What are we building the lab to…

Specifications guides this…sets the bar for “acceptance criterion”

Following are 3 examples: Which test appears to be most stringent?

A minimum of -0.5” WC (negative) differential pressure remaining after 20 minutes, from an initial (negative) pressure differential of -2.0” WC.

A minimum of -0.25” WC (negative) differential pressure remaining after 5 minutes, from an initial (negative) pressure differential of -0.75” WC.

A measured air leakage rate of 120 CFM into the suite when under a -0.5” W.C. (negative) differential pressure to the surrounding area for a period of 10 minutes.

What are we building the lab to…

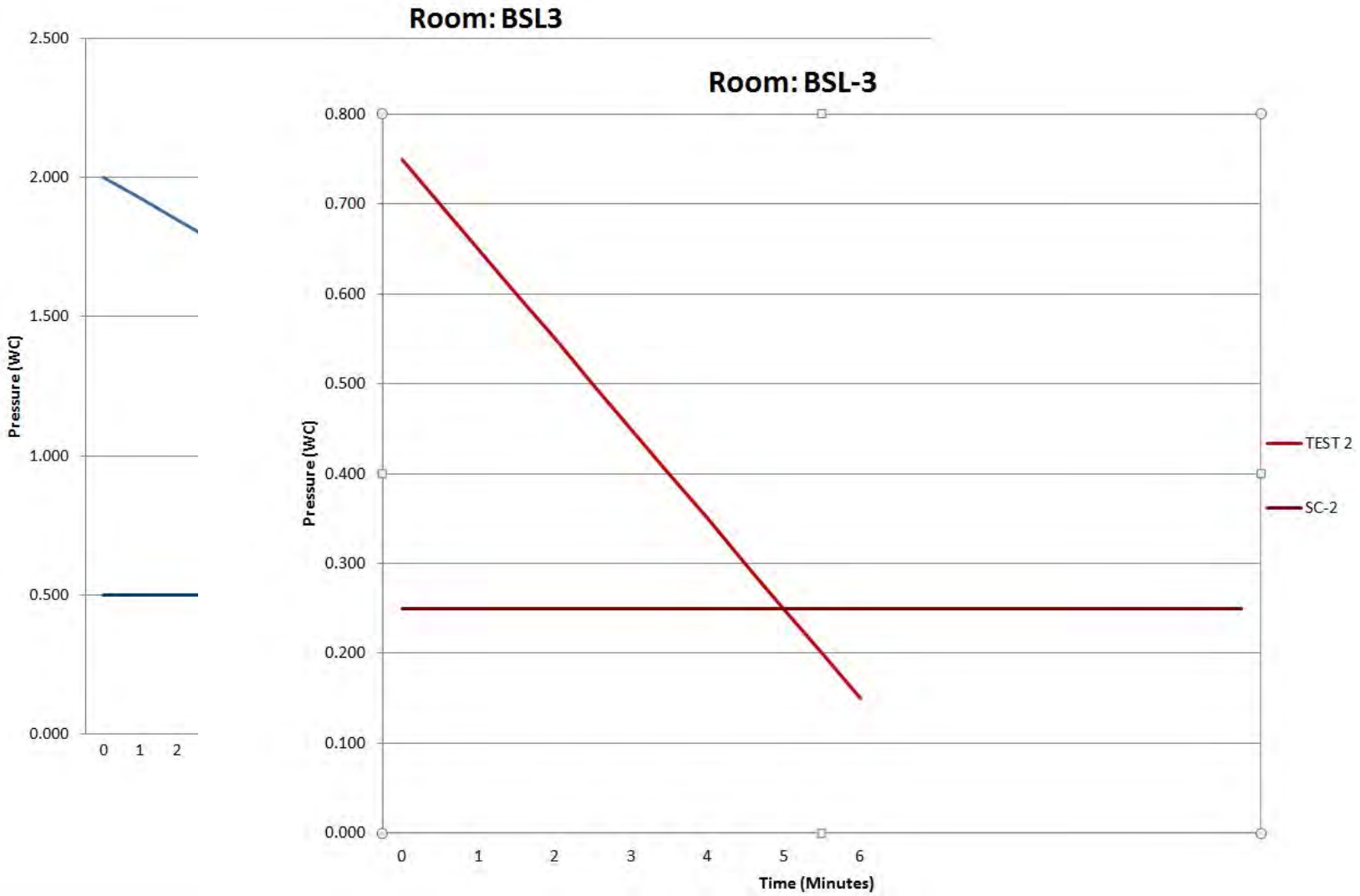

What are we building the lab to…

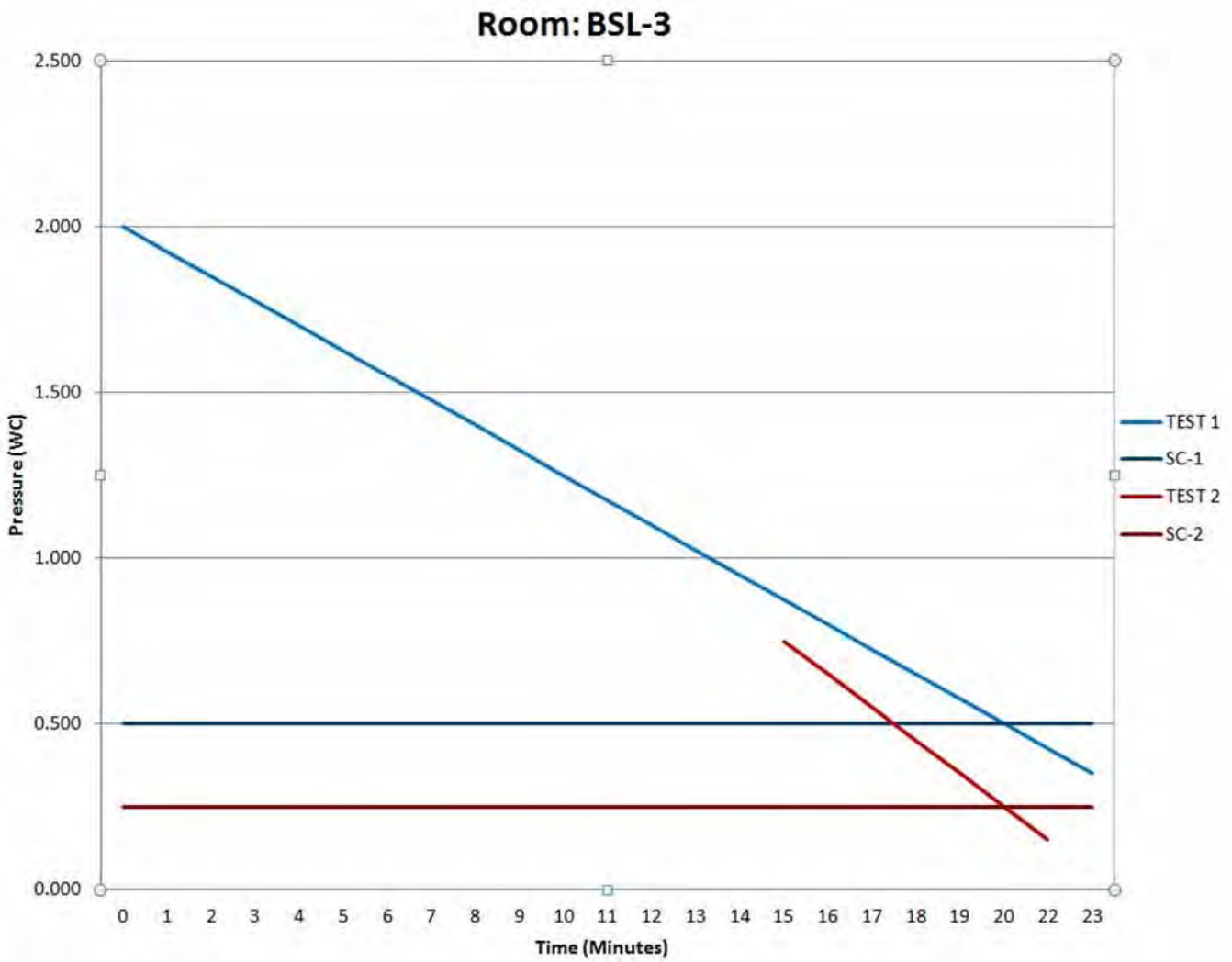

How are we zoning and why

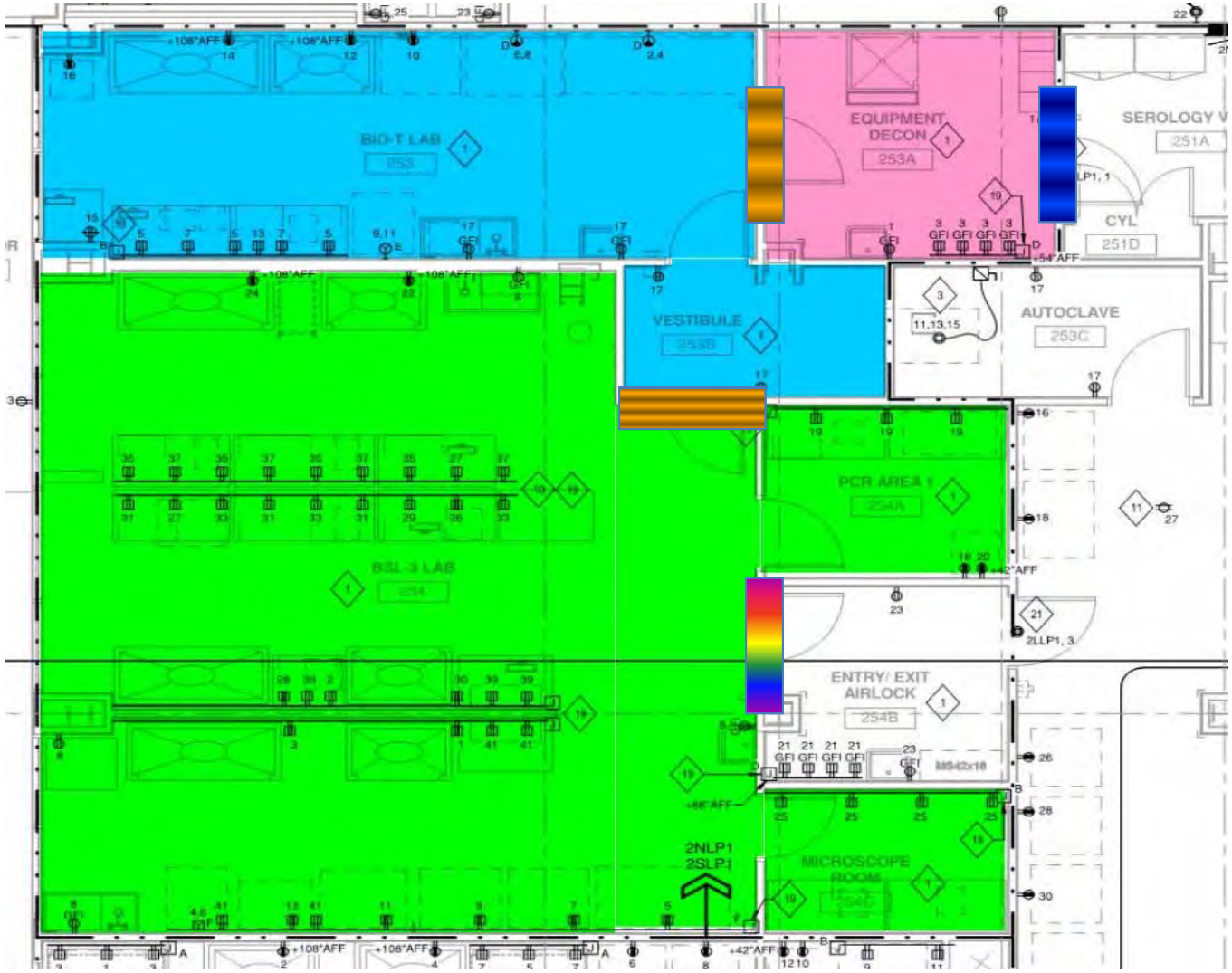

Containment

As described in the standards, the space needs to be cleanable and tight. How does this happen?

Construction Documents - Provide details on how to install

Standards - Indicate expected outcomes (though not means and methods!)

Commissioning - Systematic processes

How to get the contractors to use the details

Containment

Provide Constructors a Lessons Learned Power Point of previously constructed facilities

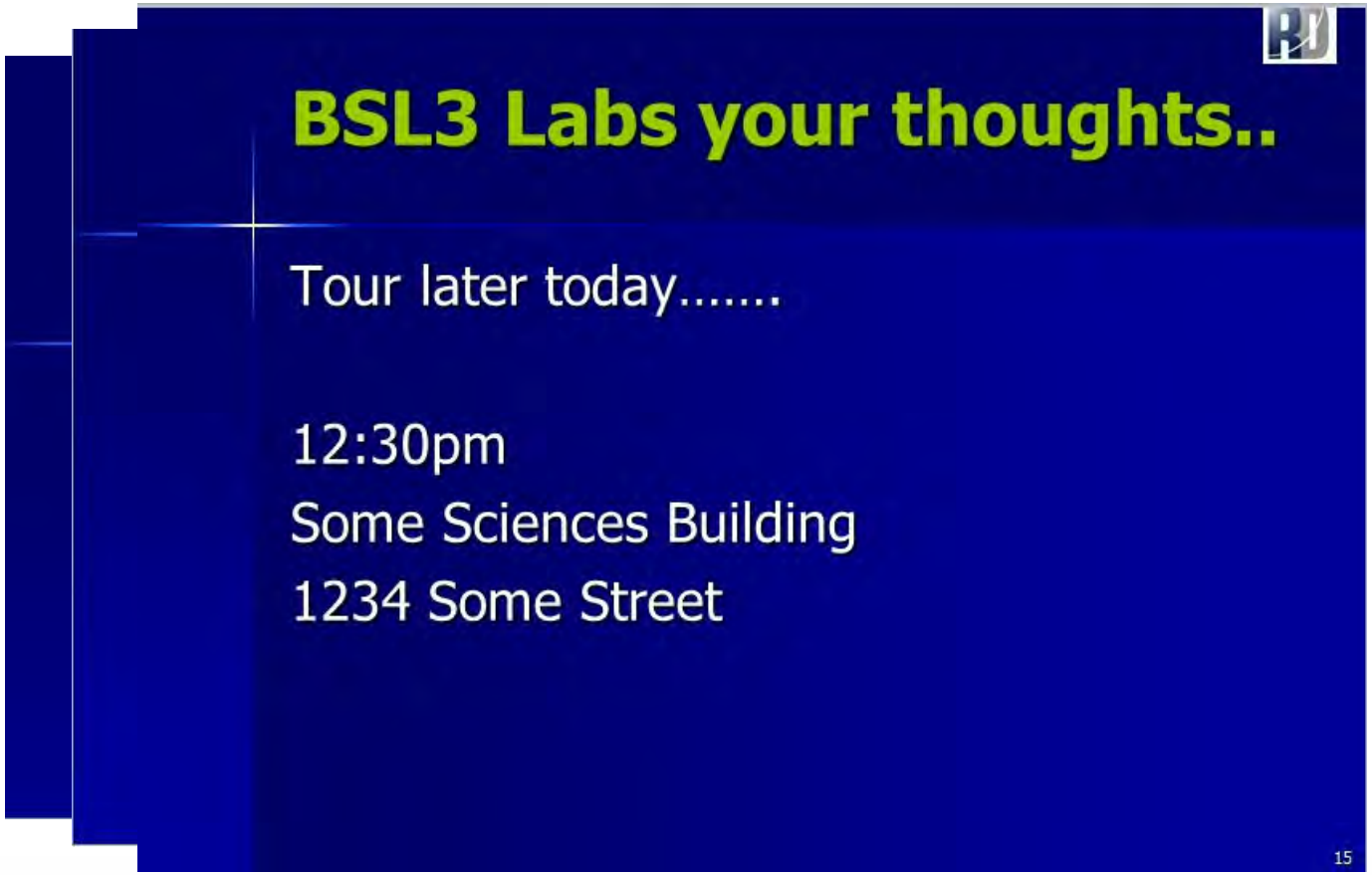

Containment

Construction: how do you get the contractor to use the design teams details:

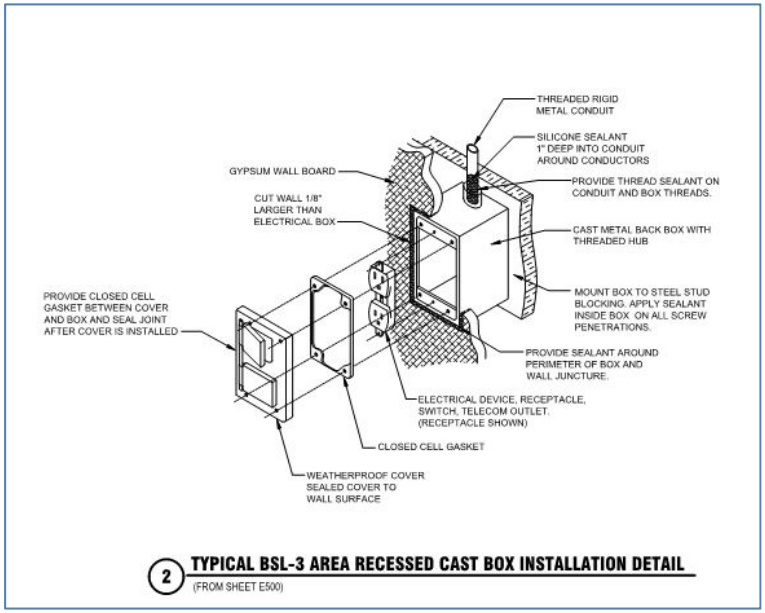

Containment

Construction: How do you get the contractors to use the design teams details?

Containment

Discuss details

Obtain buy-in of their use

Change if necessary

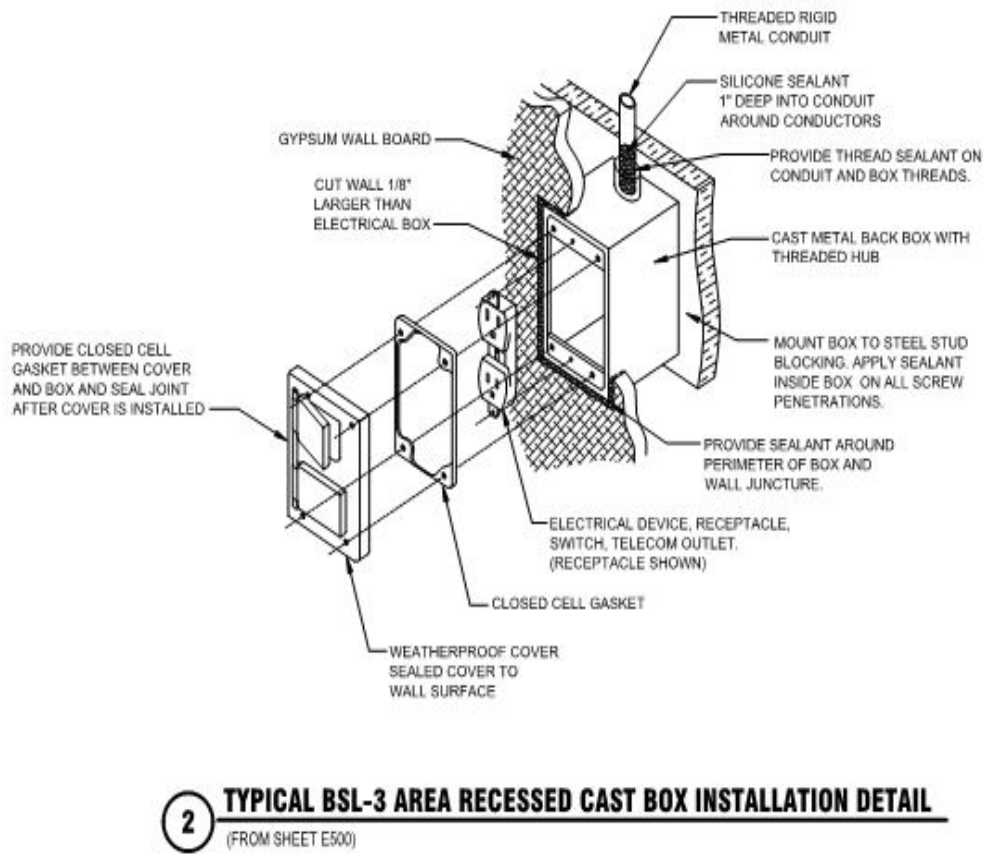

Containment

Discuss details
Obtain buy-in of their use
Change IS necessary

AND
CHANGE
WE
DID

Containment

Penetration Tracking Log

							PRE-TESTING OPPORTUNITIES				
ROOM	WALL	Pene ID	Device	Responsibility	Inner's Caulked	Finished Caulked	Date	Pass / Fail	Date	Pass / Fail	Notes
Equipment Decon 253A	N	E1	Light Switch	Staff			9/12/2013				Bubble test ID#53 S-3
Equipment Decon 253A	N	C1	AFMS	Masters			9/12/2013				Bubble test ID#52 S-3
Equipment Decon 253A	N	C2	Door Switch	Masters							
Equipment Decon 253A	E	E2	outlet	Staff			9/12/2013				Bubble test ID#56 S-0
Equipment Decon 253A	E	P1		Hooper							
Equipment Decon 253A	E	P2		Hooper							
Equipment Decon 253A	S	E3	pull and Switch	Staff			9/12/2013				Bubble test ID#55 S-1
Equipment Decon 253A	S	C3		Masters							
Equipment Decon 253A	S	E4	Light Switch	Staff							
Equipment Decon 253A	W	G1		Miron							
Equipment Decon 253A	W	E5		Staff							
Equipment Decon 253A	W	E6	outlet	Staff			9/12/2013				Bubble test ID#54 S-0
Equipment Decon 253A	W	E7		Staff							
Equipment Decon 253A	W	G2		Miron							
Equipment Decon 253A	W	P3		Hooper							
Equipment Decon 253A	W	P4		Hooper							
Equipment Decon 253A	W	P5		Hooper							
Equipment Decon 253A	Ceiling	F1	Sprinkler Head	Hooper							
Equipment Decon 253A	Ceiling	F2	Sprinkler Head	Hooper							

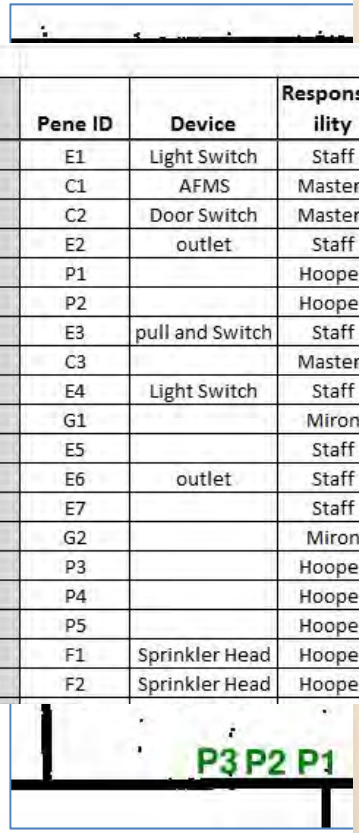

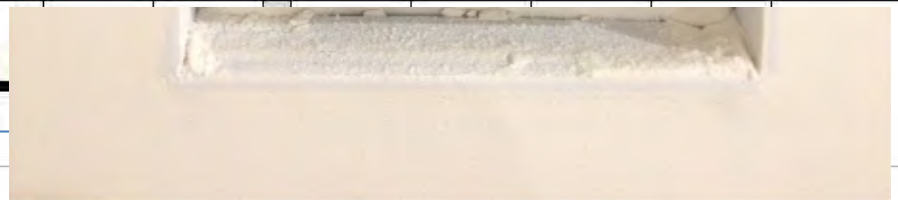

Containment

Specifications describe the testing method steps:

- Observation and Listening
- Soap Bubble Testing / Smoke Testing
- Final Testing (typically two consecutive successful tests)

It has to ALWAYS be remembered that both the supply ducts and the exhaust ducts are part of the containment space

- Creates its own challenges
- Duct in “no-mans space”
- Duct in the penthouse

Containment

The Duct

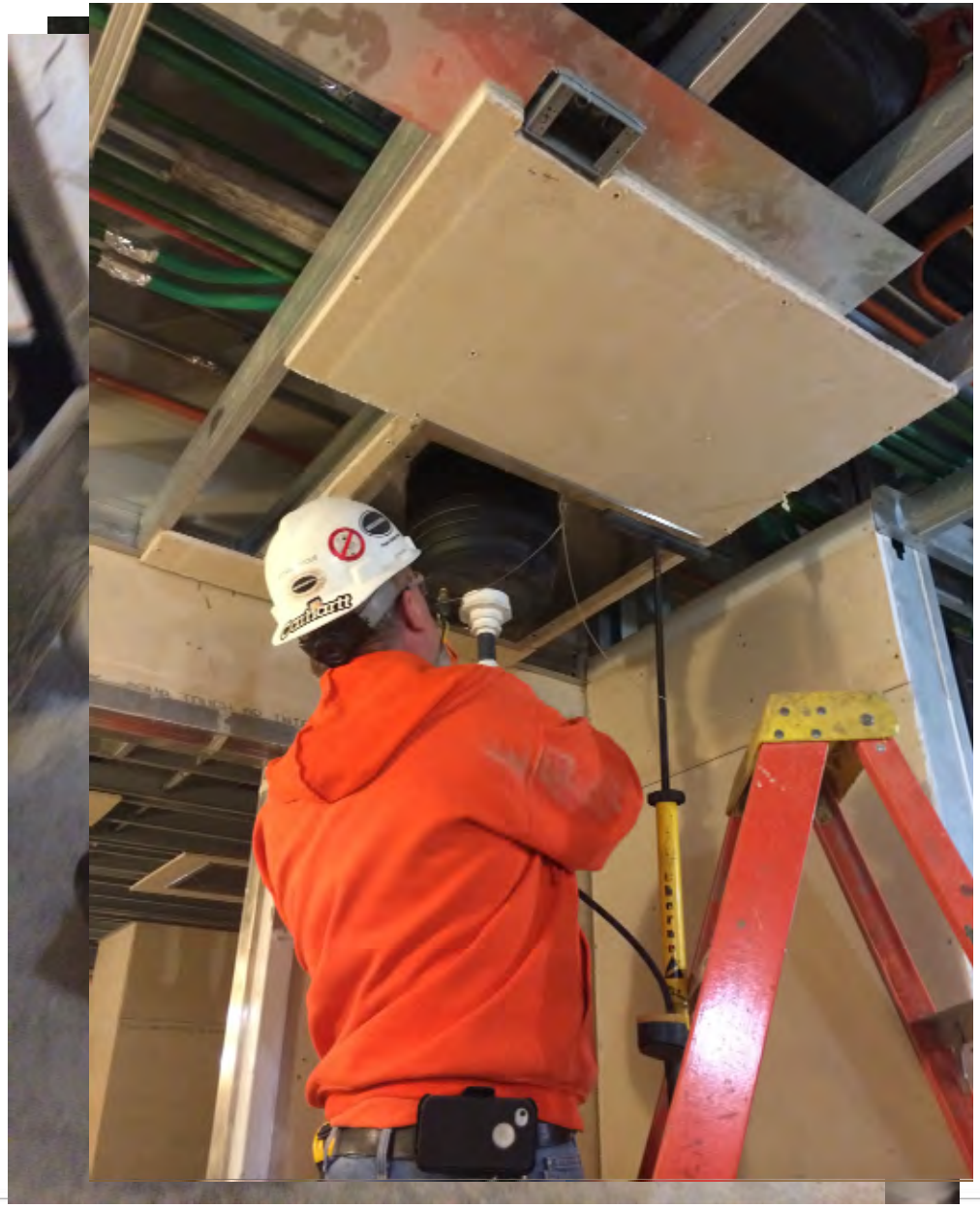

Containment

Preparing the Space:

- Test Doors
- Vacuum Cleaner
- Calibrated Meters
- Bubble Gun
- Smoke Gun
- Dish Wash Liquid
- Painters Tape

Containment

Observing and Listening:

What might NOT be a leak early in the process might become a leak as other leaks are found and repaired – the NEW path of least resistance!

Containment

Soap Bubble and Smoke Testing:

- Door Frames
- Floor
- Duct
- Lights
- Shelves

Containment

And then frustration sets in

Containment

Success does come eventually

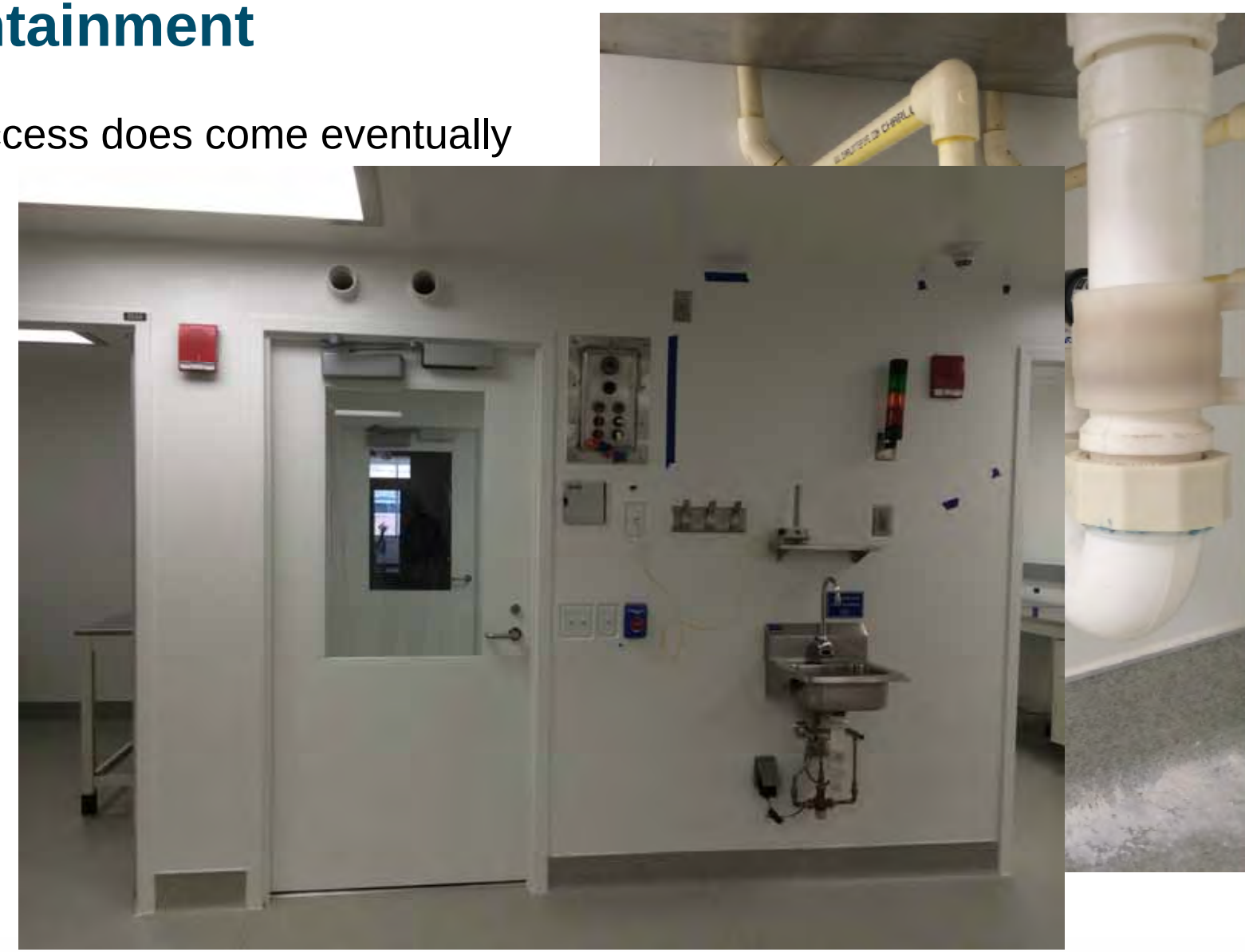

Containment

Success does come eventually

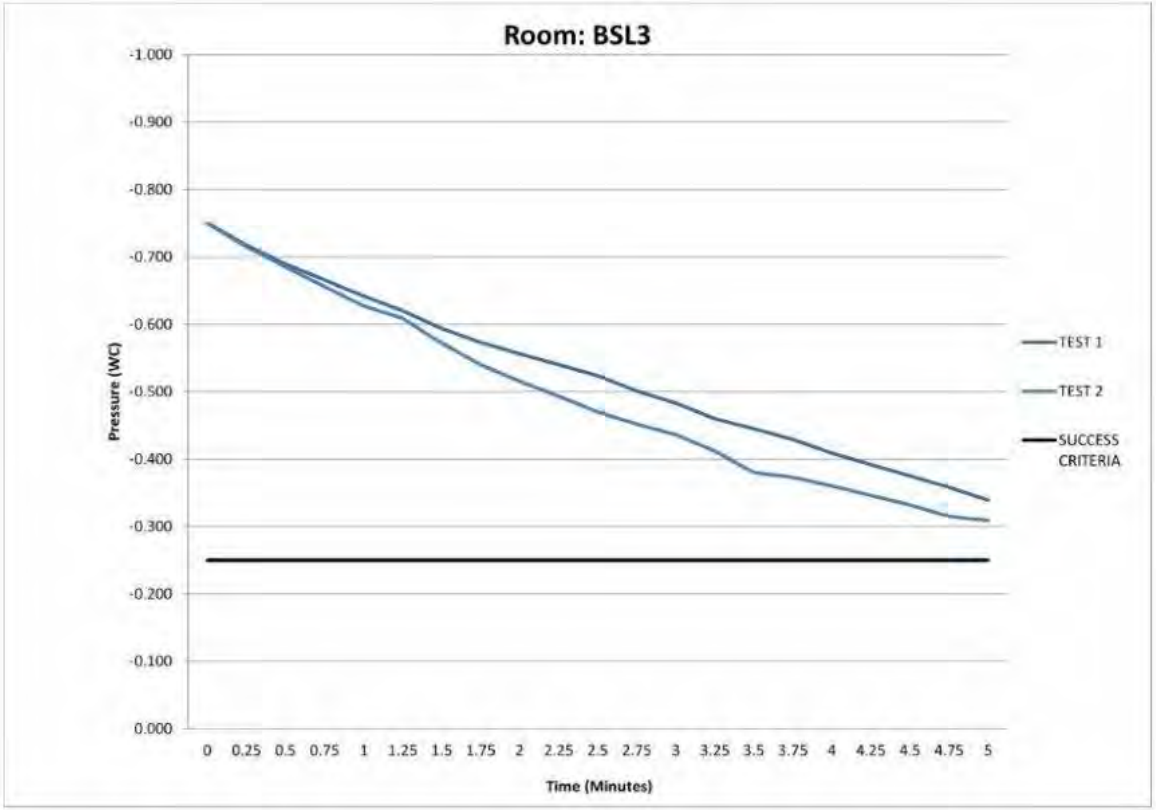

Installation

Construction verification and factory startup forms used

Installation

System Operation (No Reversals)

As construction is proceeding, many other actions are ongoing:

- Vetting the sequence of operation (additional controls page turn meetings)
- Reviewing the control minutia
- Software simulation (if possible)
- User interface review (expose the hidden code)
- Setup trending immediately (trend everything)
- Graphics
- Dry run test
- Functional Test scripts
- Pre-Testing, Documenting, Learning, Re-Testing…..

Sequence of Operation

BSL-3 LABORATORY ROOM LEVEL CONTROL SEQUENCE:

SPECIFICATION

GENERAL:

Provide Automated Venturi Valves on all zone supply and exhaust ducts.

Room pressure transmitters shall be referenced to adjacent space to establish desired differential room pressures.

Provide supply air automated bubble tight dampers at point of entry from containment as indicated on Mechanical plans.

Exhaust bubble tight dampers (manual operated) shall be located on both inlet and outlet of each HEPA Filter Unit.

Supply air bubble tight damper position indicators shall be used to verify status of damper open/close position.

Dedicated Supervisory level BAS controller shall be provided to serve BSL-3 suite only.

Provide high pressure switches in BSL-3 Lab 254, BIO-T Lab 253 and Equipment Decon 253A. High pressure switches shall be hard wired to the supply air bubble tight damper control circuit to allow bubble tight dampers to close when pressure exceeds 0.25" w.c. (adj) and hard wired to exhaust fan safety circuits.

PRESSURE MONITOR ALARMS:

Space pressure monitors shall be equipped with audible/visual alarms and shall be wired to audible/visual alarms located in lab space being monitored by respective pressure monitor.

Remote alarms shall be wired directly to pressure monitor and shall have a silence button.

Alarms shall activate whenever pressure is out of range or if door contact indicates door is open for more than 30 seconds (adj).

STACK LIGHT STATE CONDITIONS:

Provide tricolored system status indicator lamps at entrance to Room 254B, 254, 253 and 253A (refer to plans) to inform occupants of current operating status of supply air and exhaust air systems.

Green Light – (Normal State):

Shall be controlled by BAS and shall be energized when Supply and Exhaust system static pressures are within 10% of system design static pressure setpoint for 2 minutes (adj).

Red Light – (Alarm State):

Shall be controlled by BAS and shall be energized when any of the following occur:

- Both BSL-3 exhaust fans have failed (loss of run status or isolation dampers indicate closed) after system restart attempts have failed.

BSL-3 LABORATORY ROOM LEVEL CONTROL SEQUENCE:

SUBMITTAL

GENERAL:

There are automated Phoenix Valves on all zone supply and exhaust ducts.

Room pressure transmitters are referenced to adjacent space to establish desired differential room pressures.

There are supply air automated bubble tight dampers at point of entry from containment located in the penthouse mechanical room.

Exhaust bubble tight dampers (manual operated) are located on both inlet and outlet of each HEPA Filter Unit.

Supply air bubble tight damper position indicators are used to verify status of damper open/close position.

There are high and low pressure switches in BSL-3 Lab 254, BIO-T Lab 253 and Equipment Decon 253A. High pressure switches are hard wired to the supply air bubble tight damper control circuit to allow bubble tight dampers to close when pressure exceeds 0.25" w.c. (adj) and hard wired to exhaust fan safety circuits.

PRESSURE MONITOR ALARMS:

Pressure monitors are equipped with audible/visual alarms and are also be wired to audible/visual alarms located in the lab space being monitored by respective pressure monitor.

Alarms on pressure monitor activate whenever pressure is out of range if the door contact indicates door is open for more than 30 seconds (adj). The BAS will initiate an alarm on the user interface.

STACK LIGHT STATE CONDITIONS:

Tricolored system status indicator lamps are provided at the entrance to Room 254B, 254, 253 and 253A to inform occupants of current operating status of supply air and exhaust air systems.

Green Light – (Normal State):

Controlled by the BAS and energized when Supply and Exhaust system static pressures are within 10% of system design static pressure setpoint for 2 minutes (adj).

Red Light – (Alarm State):

Controlled by the BAS and energized when any of the following occur:

- Both BSL-3 exhaust fans have failed (loss of run status or isolation dampers indicate closed) after system restart attempts have failed.

So…. What is really going to happen? Word for word copy of control contractor sequence of operation in controls submittal to match that of designer often means control contractor is not thinking it through!

Control Drawings

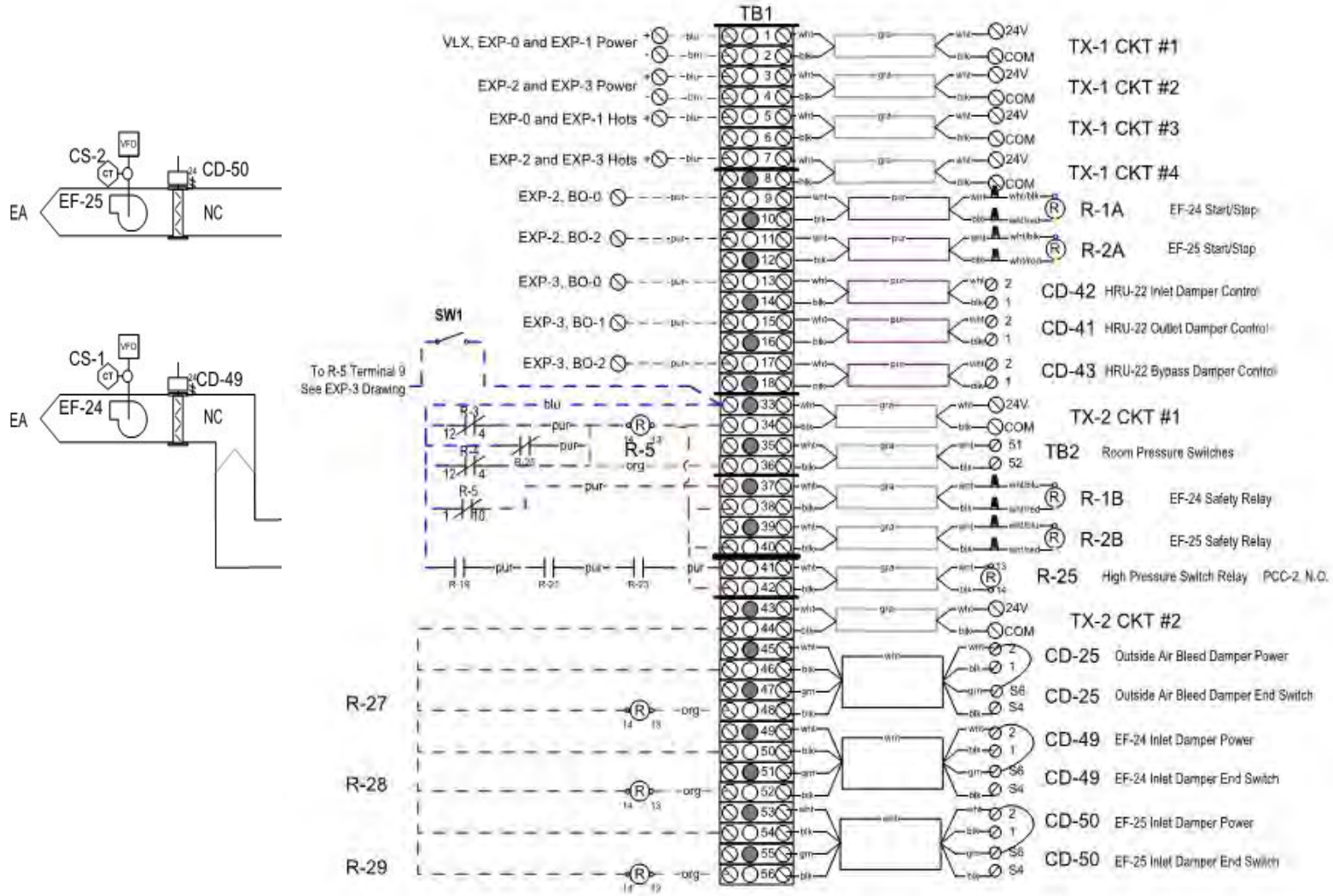

Vetting and simulating software

Use automation simulation to the fullest

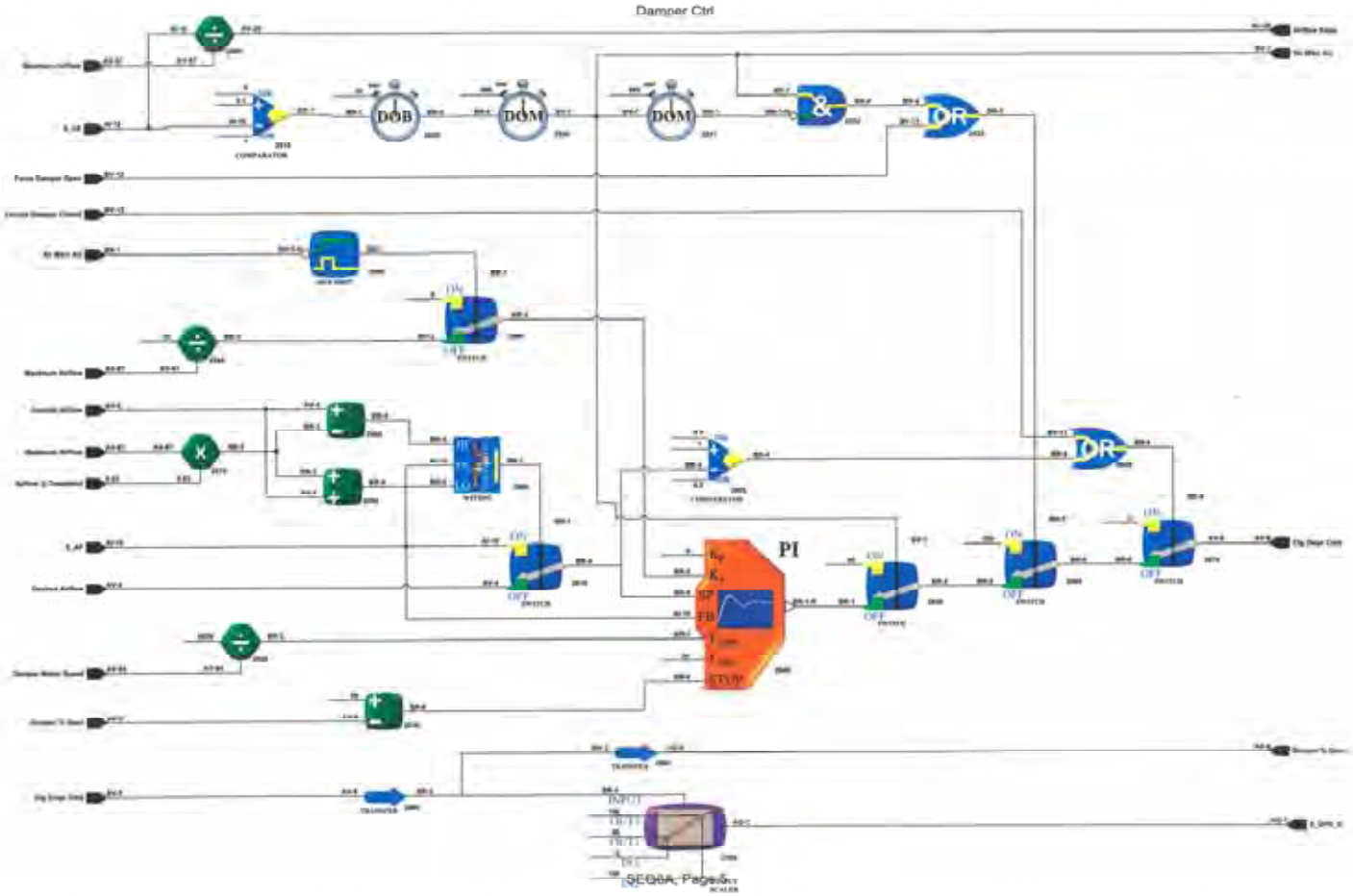

Pre-Testing

Exposing points buried in code, especially problematic when using (for example) a Tridium front end….Typically only the general information is bought forward…We NEED it all!

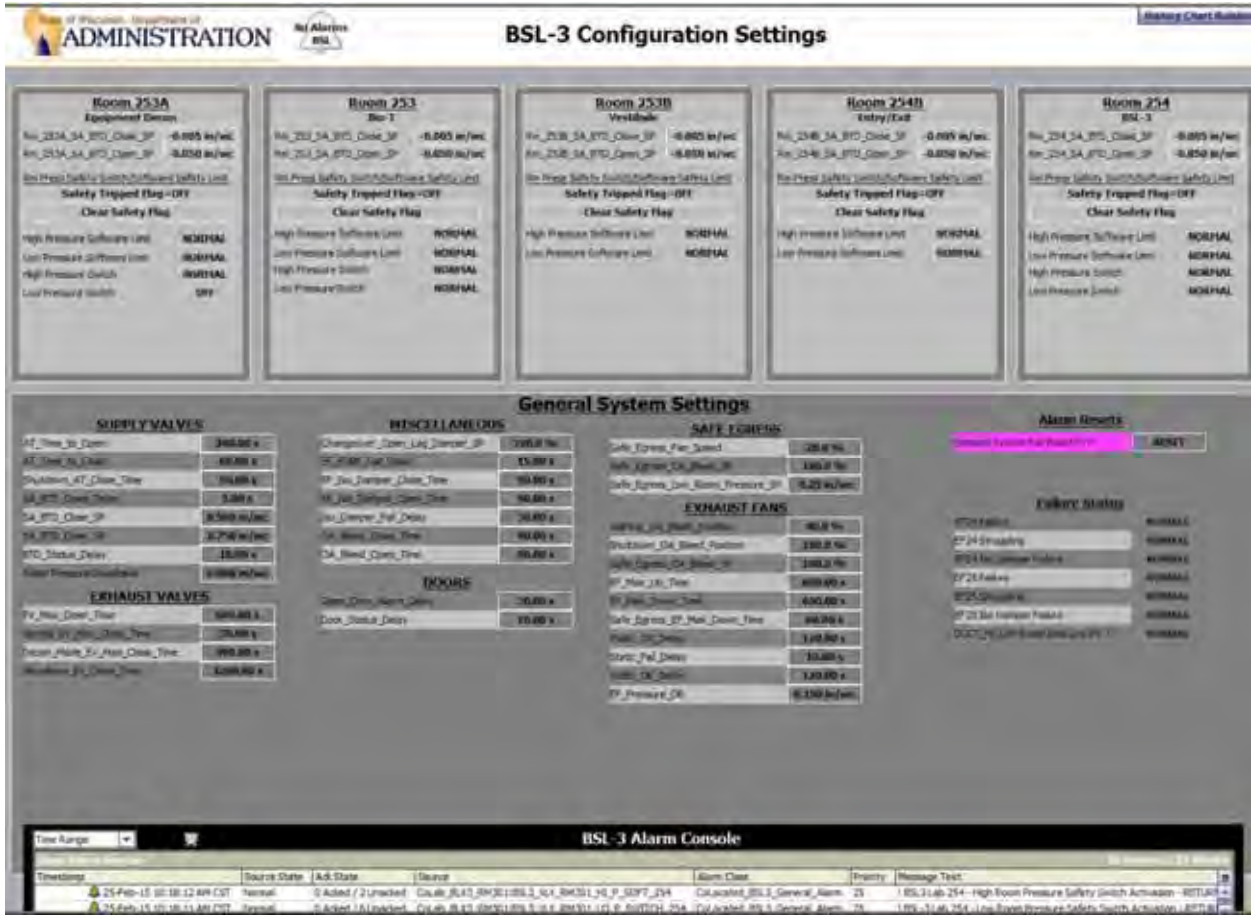

Utilizing Graphics to the Fullest

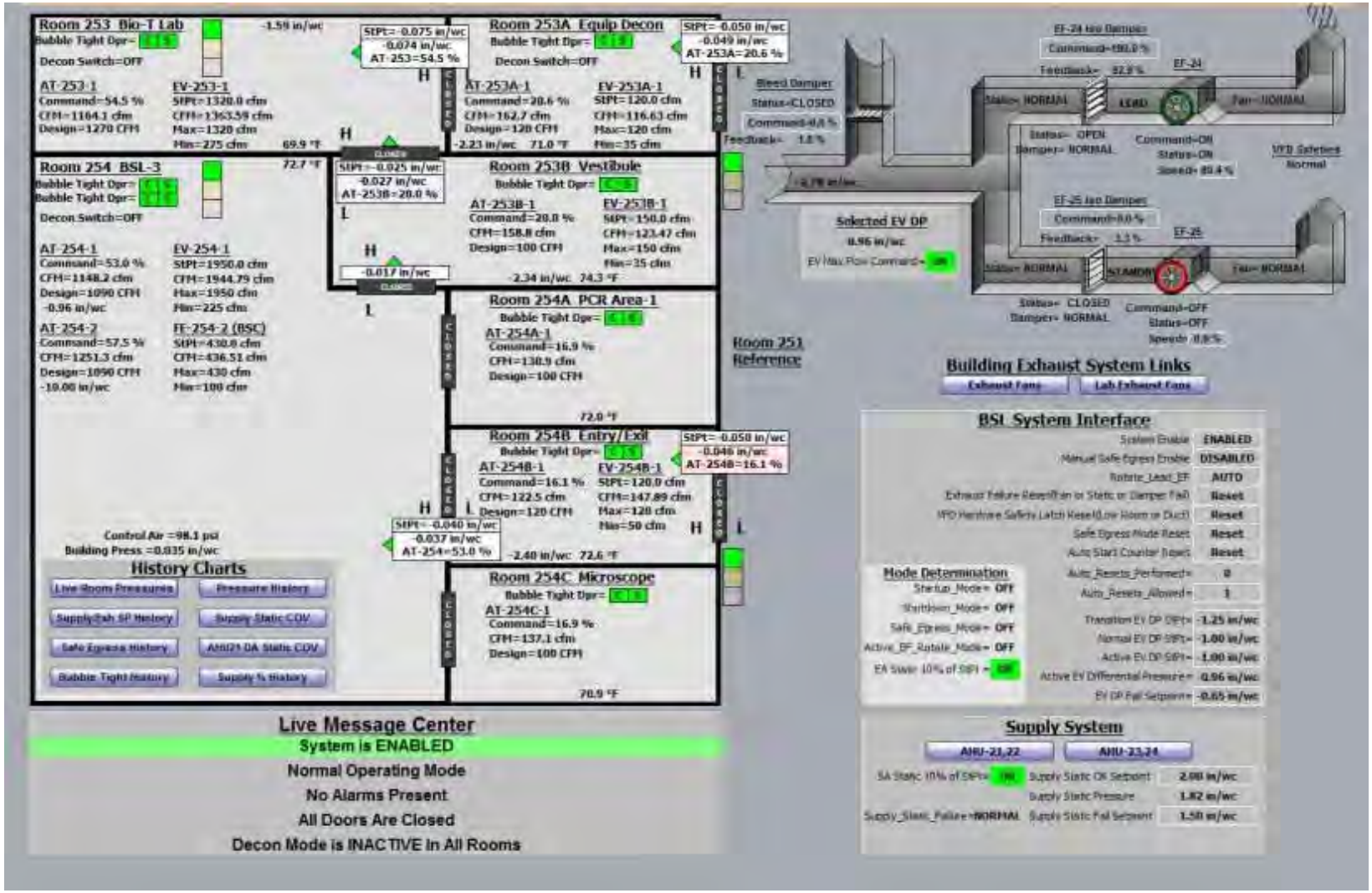

Direction of Air Flow

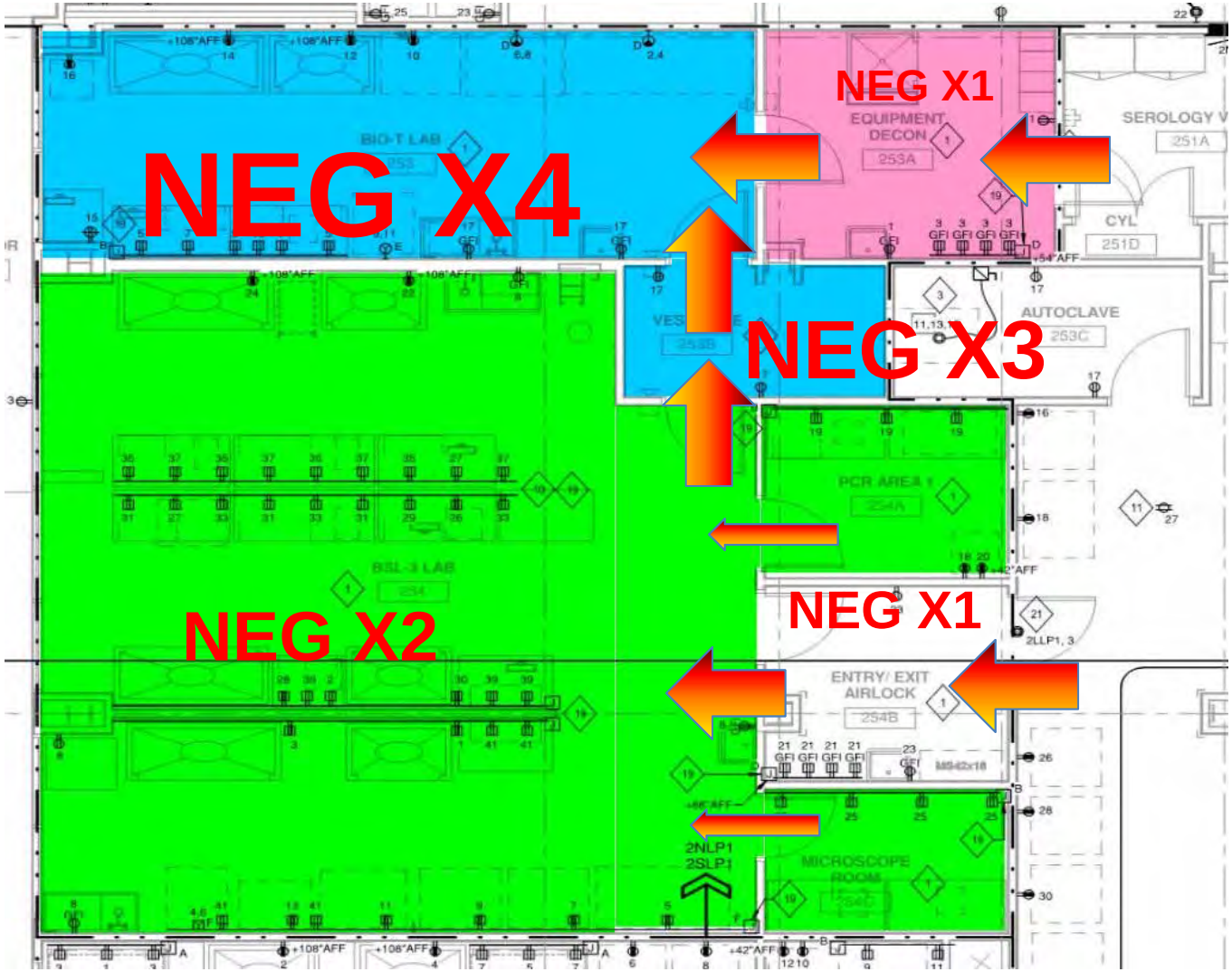

Utilizing Trending to the Fullest

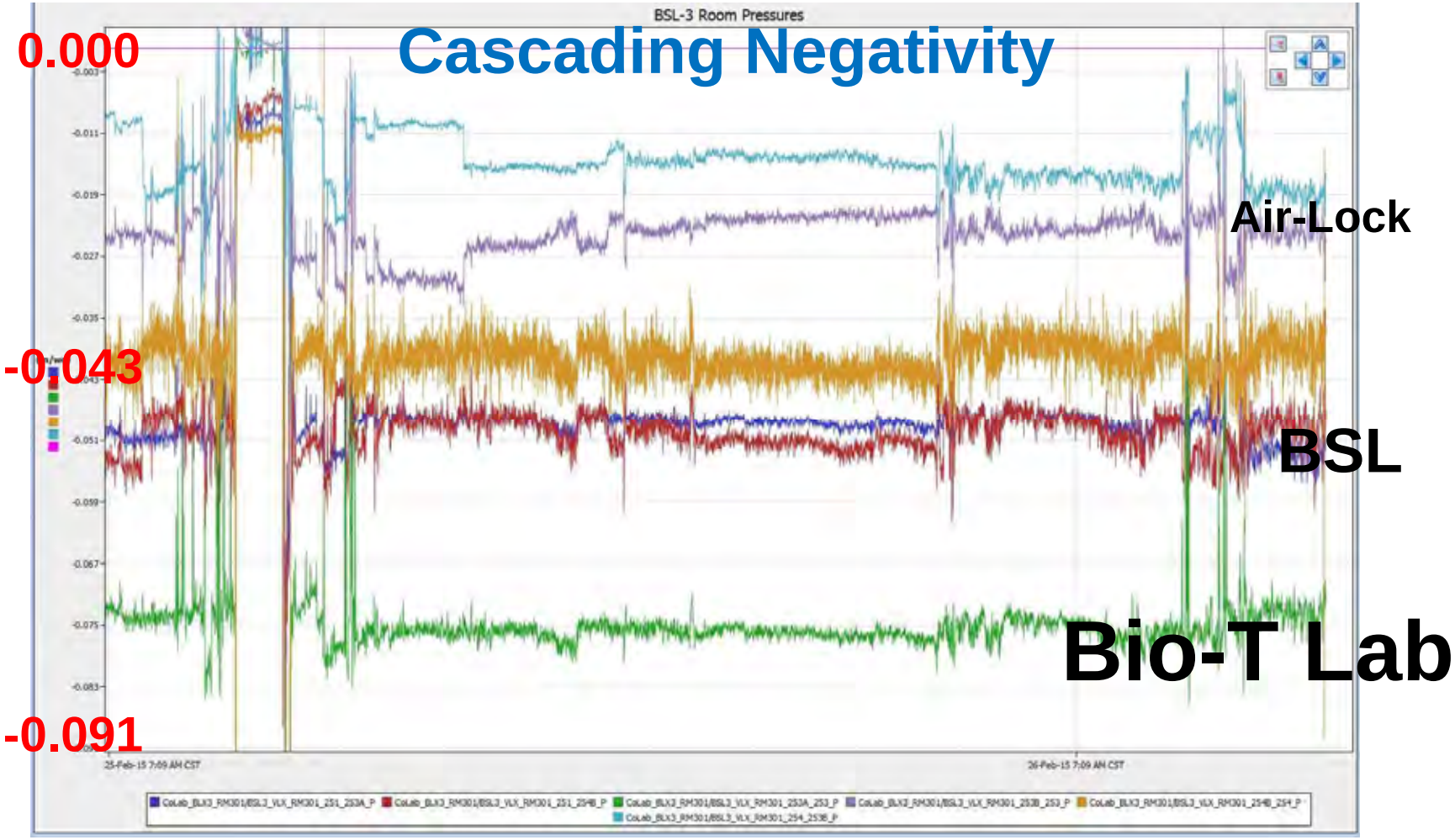

RO - Documentation Support Needed to Provide to FSAP

Verification of HVAC design functionality under failure conditions

Demonstrate during exhaust fan or normal power failure or normal power start up, **there is NO reversal of air** (air from within the BSL-3 does not make it out of the containment boundary).

Failure conditions that must be met:

- Mechanical failure of EF or fan components
  - With redundant fans - Ability to transition to alternate fan with no reversal of airflow
  - With no redundancy - Ability to transition from sustained inward flow to laboratory to a static condition (NO airflow out)

RO - Documentation Support Needed to Provide to FSAP

- Power failure of supply fan and exhaust fan components
  - With emergency power - Ability to transition from normal power to backup power with no reversal of airflow
  - With no backup power - Ability to transition to a static condition with no reversal of airflow (NO airflow out)

- Return to normal power
  - With emergency power - Ability to transition from backup power to normal power with no reversal of airflow
  - With no backup power - Ability to return to normal operating conditions with no reversal of airflow (NO airflow out)

RO - Documentation Support Needed to Provide to FSAP

[redacted]

Functional Test [redacted]

Functional Test For: BSL3 Lab
Device Tag: EF-24 & 25 with HRU-22

	Date: 4/14/15, 4/15/15, 4/20/15					Witness: Dave & Jeff R&D, Dale & Darren [redacted], Brain [redacted], Kyle MBS
Action Step	Expected Response	Outcome				Notes:
		Pass	Fail	Retest	Trend	
Power Outage	In event of failure of primary electrical service, exhaust exhaust fan(s) in the BSL3 laboratory exhaust system shall operate via standby power from standby generator.					
	Designation of system exhaust fans enabled to operate via standby power from standby generator is to be manually definable through BAS.					Denote designated fans
	On failure of a laboratory exhaust fan, as detected by current switch or upon detection of a VFD failure, exhaust fan shall be stopped, critical alarm shall be generated at BAS, and standby exhaust fan shall be commanded to start. Time limit for determining fan failure shall be 60 seconds (adj.) after fan is initially commanded to start. Failed fans shall be locked out until manually reset through BAS.					
	SCENERIOS					
Placing Bio-T into Decon mode	Follow documented procedure	X		X		
	Confirm space to be decon'ed is not the control point for static pressure control	X		X		Currently using EV-254-1 Currently using EV-254-1
	Manually initiate Safe Egress mode process to slow system	X		X		
	Once in safe egress Close 2 PVC ports above door Activate Keyed decon Switch	X		X		
	Once Green/Amber/Red stack light on for 'decon zone activated' indicating dampers are in correct position Manually close the bubble tight	X		X		Lights ON
	Place system back into normal operation (out of safe egress) Start sequence initiated		X	X		System tripped into 'shutdown mode' due to a high static safety that had previously tripped but not visible on user interface (need to be able to scan for alarms)

BSL3_EF_HRU_functional_rv03 042015.docx
Created by Ring & DuChateau LLP

Page 23 of 33

RO - Documentation Support Needed to Provide to FSAP

Snag it video tool demo

Lessons Learned

Let us build a mock-up wall and test it…

- Gives the contractors an early first hand experience on what M&M's they need
- Builds the team functions and dynamics early
- Simple to test with the bubble gun

Lessons Learned

Dedicated Redundancy

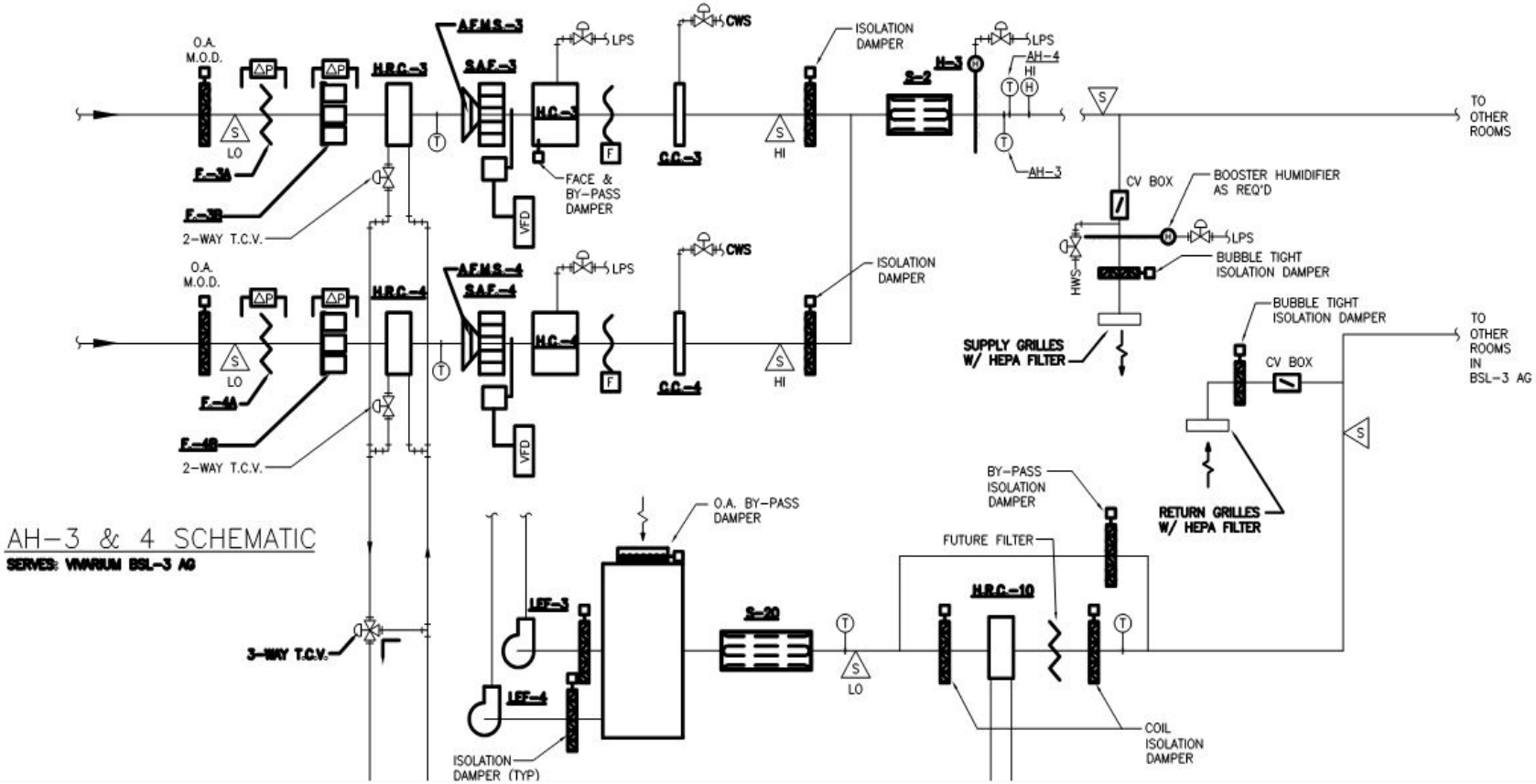

Quiz: Which Level BSL Should be Utilized?

• Ricin	• BSL-3
• Measles	• BSL-2
• Ebola	• BSL-4
• Bird Flu	• BSL-3
• Monkey Pox	• BSL-2
• HIV	• BSL-3
• Tuberculosis	• BSL-3
• Hepatitus B	• BSL-2
• Canine Hepatitus	• BSL-1
• Malaria	• BSL-3
• Lassa	• BSL-4

Summary

- Understanding the level of BSL that is being designed, constructed and utilized.
- Understanding the HVAC design, the sequence of operation, equipment and components selection, the details of construction, installation strategies and more all play an important role in the completion of a successful BSL.
- Sharing lessons learned with all constructors on what it takes to create a tight environment.
- Demonstrating for the RO, that **there is NO reversal of air** (air from within the BSL-3 does not make it out of the containment boundary) during any failure events.
- Understanding that what is of most importance is the safety of the people – those working within the lab, those working within the building, those breathing the air outside of the building.

NCBC
May 18-20, 2015 | St. Louis, Missouri

Rachel Rueckert P.E., QCxP, CxA, LEED AP
Commissioning Provider
rrueckert@ringdu.com

Dave Guberud QCxP, CxA
Commissioning Provider
dguberud@ringdu.com

Ring & DuChateau, LLP
17400 W Capitol Drive
Brookfield, Wisconsin 53045

RING & DUCHATEAU

BCxA™ Building Commissioning Association