How To: Cx Electrical Systems Approach and Process

Curtis Wolbert
Director, Electrical Commissioning

PRIMARYINTEGRATION

AIA Quality Assurance

The Building Commissioning Association is a Registered Provider with The American Institute of Architects Continuing Education Systems (AIA/CES). Credit(s) earned on completion of this program will be reported to AIA/CES for AIA members. Certificates of the Completion for both AIA members and non-AIA members are available upon request.

This program is registered with AIA/CES for continuing professional education. As such, it does not include content that may be deemed or construed to be an approval or endorsement by the AIA of any material of construction or any method or manner of handling, using, distributing, or dealing in any material or product.

Questions related to specific materials, methods, and services will be addressed at the conclusion of this presentation.

How To: Cx Electrical Systems

Electrical systems are the foundation for the building systems that we commission, but they are rarely part of the commissioning process. As most CxPs have a strong background in mechanical engineering, it is entirely understandable why they are less likely to delve into electrical systems. However, not giving the proper attention to electrical systems can reduce building performance and reliability. Currently, there is no standard for commissioning electrical systems. ANSI/NETA ATS-2013 comes close, but this lays out a prescriptive approach for functional testing and doesn't embrace the bigger picture.

How To: Cx Electrical Systems

This presentation will discuss the commissioning process as applied to electrical equipment from project proposal to post occupancy. Topics covered will include when electrical Cx is needed, its benefits, how to conduct an electrical-centered review for the OPR, BOD, design, and submittals. Building on this foundation, we'll move into safety, functional testing, how NETA testing complements (but does not replace) FPTs, and maintenance. Specific items that will be discussed include redundancy, lessons learned, and scope to include when bringing on an electrical Cx sub-consultant.

Learning Objectives

1. Describe why electrical commissioning should be performed
2. List the benefits of electrical commissioning
3. Describe tests performed during electrical functional testing
4. Create a scope of work for electrical commissioning

Why Perform Electrical Commissioning

Electrical commissioning should be incorporated into every commissioning project whether it is a commercial building or data center.

Define the Mission of the Building

- Electrical Distribution
  - Power Systems
  - Mechanical Systems
- Lighting Systems
- Security Systems

Why Perform Electrical Commissioning

Poorly performing buildings have higher costs

- Texas A&M estimated that as much as 20% of the energy used in commercial buildings is waste associated with poorly operating systems.

Fast paced construction often results in missed planning, design, documentation, and implementation.

- Items missed can be caught by the CxP during review or testing of systems.

Benefits of Electrical Commissioning

The CxP can provide a unique perspective on electrical systems.

Reduced costs during construction
Reduced changes to design during construction

Increased reliability
Increased productivity

Reduced equipment failure
.
Reduced costs during operation

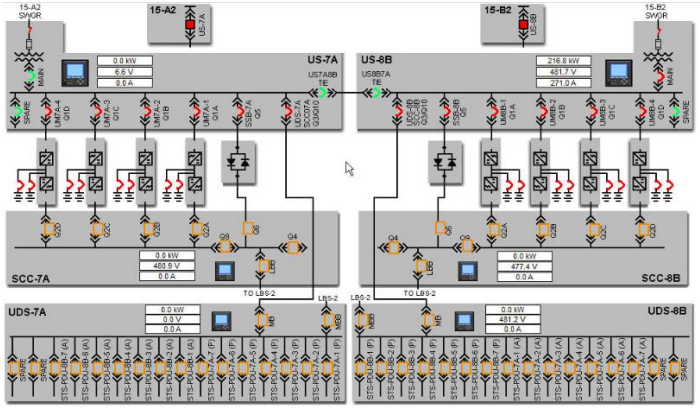

Benefits of Electrical Commissioning

Target	Location	Sites	Energy Savings	Peak Demand savings	RCx Cost ($/sf)	Payback time (years)*	Source
Local government buildings	California	11 sites; 1.5 MSf	14.3% source energy (11% electric; 34% gas)		1.01	3.5	Amaranani et al (2005); Amarani and Roberts (2006); Pierce and Amarani (2006)
Offices and hotels	New York	6 sites; 6 MSft		10%	0.34	2.0	Lenihan (2007) - projected
Offices	Connecticut	5 buildings; 2 MSf	8.5% electricity (3% to 20%)			0.5	Building Operating Management (2006)
Class A Offices	Connecticut	3 bldgs; 1.2 MSF	7.3% electric		0.62	1.37	McIntosh (2008)
Mixed comercial	Colorado	27 buildings; 10 MSf	7% elect	4.2% (0-26%)	0.185	1.51	Franconi et al. (2005)
Three offices + hospital	Colorado	4 buildings; 1.8 MSf		6%	0.026	0.38	Mueller et al. (2004)
University buildings	California	26 buildings; 3.4 MSf	10% total source (2-25%)	4% (3-11%)	1.00	2.5	Mills & Matthew (2009)
Elementary schools	Michigan	4 schools			0.38	2.5	Freidman (2004)
Supermarkets	Central California	10 stores; 0.5 MSf	12.1% elect (4.3-18.3%)		0.14	0.25	Zazzara and Ward (2004); Emerson (2004)
Mixed commercial	Northwest	8 buildings			0.221	3.2	Tso et al (2003)
Mixed commercial	Oregon	76 projects	10-15% electric (5%-40%)		0.175	1.24	Peterson (2004)
Mixed commercial and educational	California	All California Programs (2007-2008)	1.7-8.1% electric		0.40	3.0	PECI and Summit Building Engineers (2007) - estimates
Total or simple average values		**186**	**~10-15%**	**~7%**	**0.41**	**1.8**	

Notes: All impacts shown using local energy prices and commissioning costs; averages are floor-area-weighted averages.

Functional Testing of Electrical Systems

Safety

- Never work alone
- Wear appropriate clothing when working around electrical equipment
- Wear proper PPE

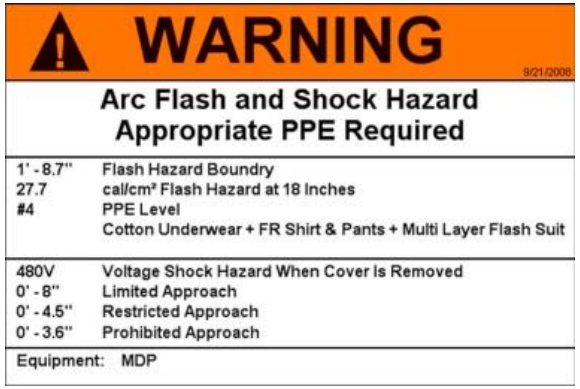

Functional Testing of Electrical Systems

Design Drawings

Specifications and Submittals

NETA Testing

Functional and
Integrated Systems Tests

Adjustable Settings

Alarms and Threshold Settings

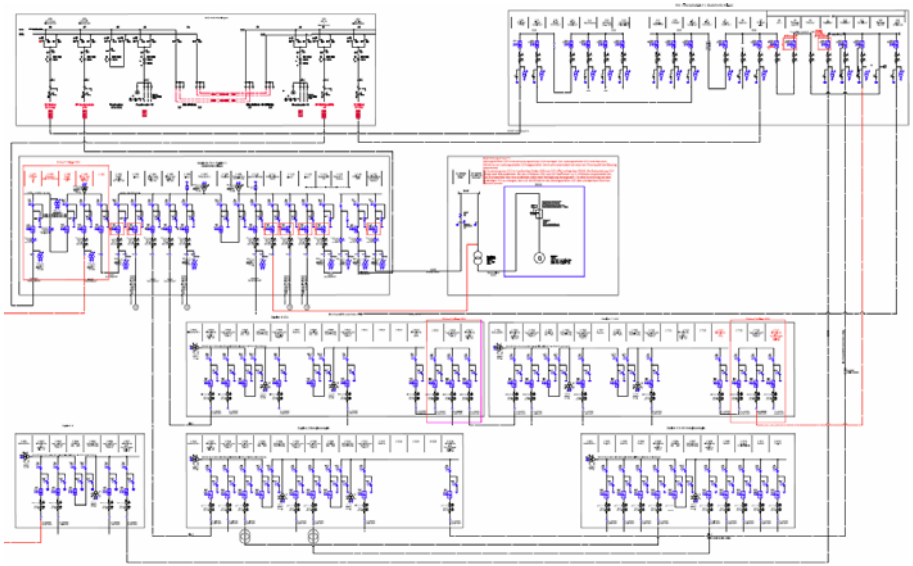

Functional Testing of Electrical Systems

Test Equipment
- Voltmeter
- Current Transformer
- Power Quality

Thermography
- Qualitative vs. Quantitative

False Load
- Load Banks

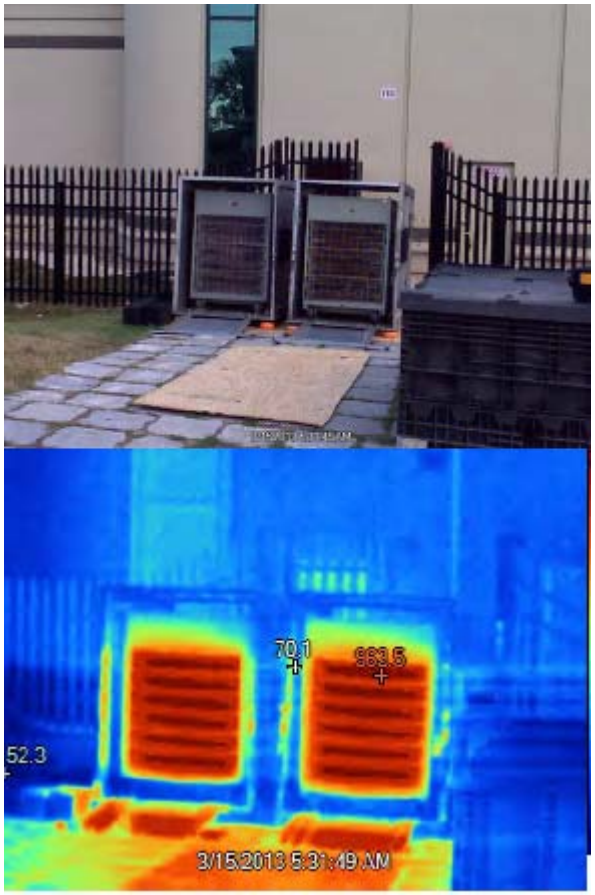

Scope of Electrical Commissioning

Owners project requirements

Electrical Basis of Design

Specification and Submittal Review

Factory Witness Testing

Acceptance and Pre-Functional Testing

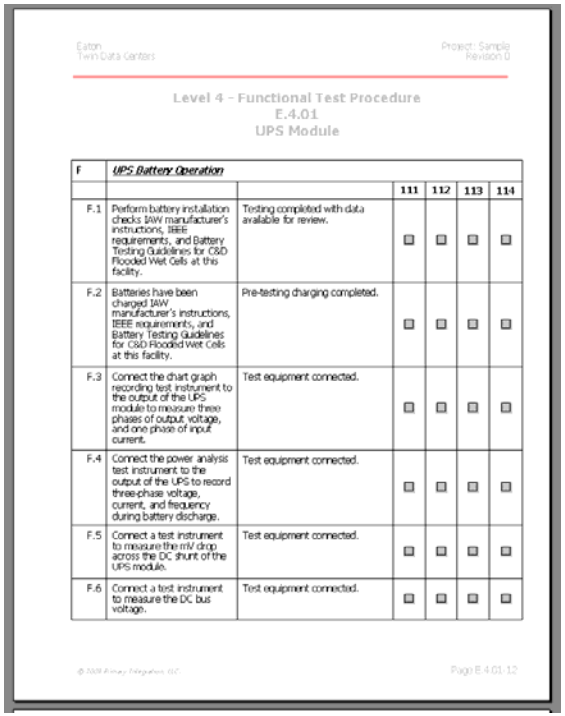

Eaton
Twin Data Centers

Project: Sample
Revision 0

Level 4 - Functional Test Procedure
E.4.01
UPS Module

F	UPS Battery Operation					
			111	112	113	114
F.1	Perform battery installation checks IAW manufacturer's instructions, IEEE requirements, and Battery Testing Guidelines for C&D Flooded Wet Cells at this facility.	Testing completed with data available for review.	☐	☐	☐	☐
F.2	Batteries have been charged IAW manufacturer's instructions, IEEE requirements, and Battery Testing Guidelines for C&D Flooded Wet Cells at this facility.	Pre-testing charging completed.	☐	☐	☐	☐
F.3	Connect the chart graph recording test instrument to the output of the UPS module to measure three phases of output voltage, and one phase of input current.	Test equipment connected.	☐	☐	☐	☐
F.4	Connect the power analysis test instrument to the output of the UPS to record three-phase voltage, current, and frequency during battery discharge.	Test equipment connected.	☐	☐	☐	☐
F.5	Connect a test instrument to measure the mV drop across the DC shunt of the UPS module.	Test equipment connected.	☐	☐	☐	☐
F.6	Connect a test instrument to measure the DC bus voltage.	Test equipment connected.	☐	☐	☐	☐

Scope of Electrical Commissioning

Functional Testing

Integrated System Testing

Sub-Consultants

Reporting

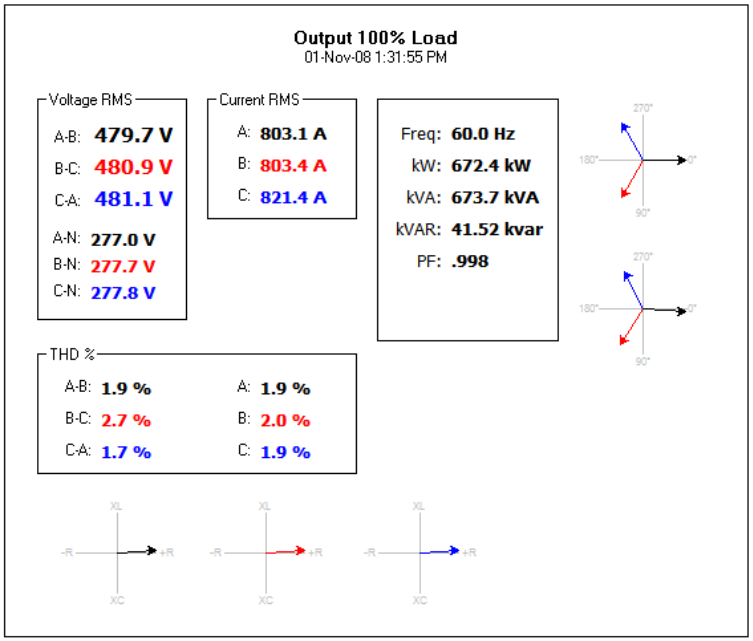

Questions?

2016 NCBC

May 16-18, 2016 | Indian Wells, California

Curtis Wolbert
Director, Electrical Commissioning

Primary Integration – Solutions, Inc.
cwolbert@primaryintegration.com
www.primaryintegration.com

PRIMARYINTEGRATION

BCxA® Building Commissioning Association